DATA GENERAL
CORPORATION
Southboro,
Massachusetts 01772
(617) 485-9100

Here are your Data General Logic Diagrams. These diagrams are printed on specially prepared vellum and are reproducible on any ozalid process.

THIS DRAWING AND SPECIFICATIONS, HEREIN, ARE THE PROPERTY OF DATA GENERAL CORPORATION AND SHALL NOT BE REPRODUCED OR COPIED OR USED IN WHOLE OR IN PART AS THE BASIS FOR MANUFACTURE OR SALE OF ITEMS WITHOUT WRITTEN PERMISSION.

REVISIONS				
REV.	DESCRIPTION	DRFTG.	APP. BY	DATE

NOTES: PREASSEMBLE ITEMS 1 2 & 3 TO CHASSIS-TRAK OUTER RAILS. INSTALL OUTER RAILS & ITEM 5. TO RACK RAILS (5/8 CENTERS PER NEMA STANDARD). EXTEND CENTRE CHASSIS TRAK RAILS & INSTALL 'NOVA' ON TO RAILS.

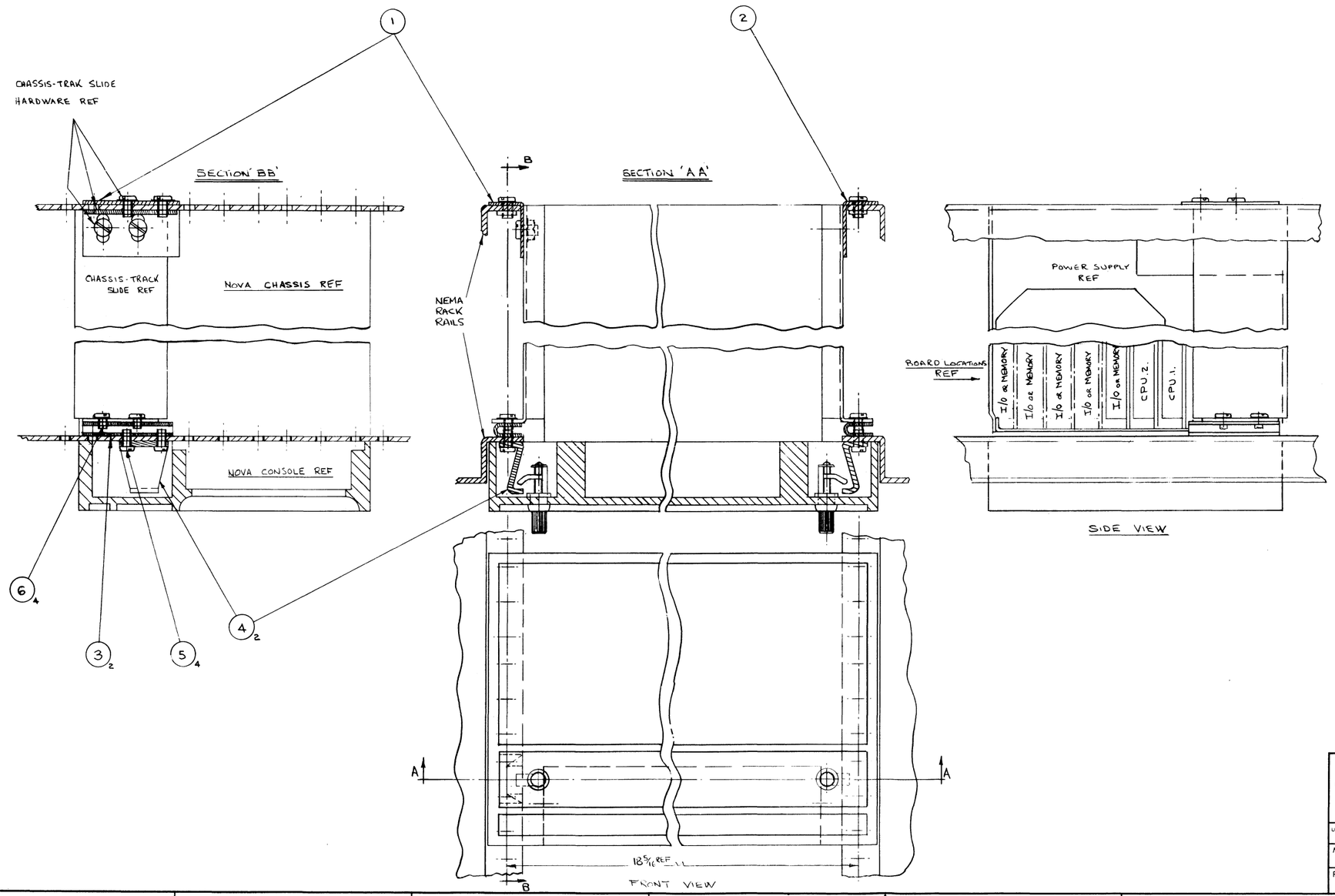

ITEM	QTY.	DESCRIPTION	PART NO.
REF		NOVA ASSEMBLY WITH SLIDES	
6	4	8-32 x 3/16 LG BINDING HD SCREW STAINLESS STEEL	
5	4	8-32 x 3/16 LG BINDING HD SCREW STAINLESS STEEL	
4	2	STRIKE PLATE	002-000103-00
3	2	BRACKET, SLIDE, FRONT	002-000102-00
2	1	BRACKET, SLIDE, REAR, RIGHT	002-000101-00
1	1	BRACKET, SLIDE, REAR, LEFT	002-000100-00

UNLESS OTHERWISE SPECIFIED— DIMENSIONS ARE IN INCHES TOLERANCES ON FRACTIONS ± 1/64 DECIMALS .XX ± .XXX ± ANGLES ± PARTS TO BE FREE FROM BURRS BREAK ALL EDGES .010

UNLESS OTHERWISE SPECIFIED ALL MACH. SURFACES

MATERIAL

FINISH

DRAWN	J. AUSTIN	7-15-69
CHECKED		
ENGINEER		
APPROVED		
FIRST USED ON		
SHEET 1 OF 1		

DATA GENERAL CORPORATION

TITLE

NOVA, INSTALATION

SIZE	CODE	DRAWING NUMBER	REV.
D	002	000055	01

THIS DRAWING AND SPECIFICATIONS, HEREIN, ARE THE PROPERTY OF DATA GENERAL CORPORATION AND SHALL NOT BE REPRODUCED OR COPIED OR USED IN WHOLE OR IN PART AS THE BASIS FOR MANUFACTURE OR SALE OF ITEMS WITHOUT WRITTEN PERMISSION.

REVISIONS				
REV.	DESCRIPTION	DRFTG.	APP. BY	DATE

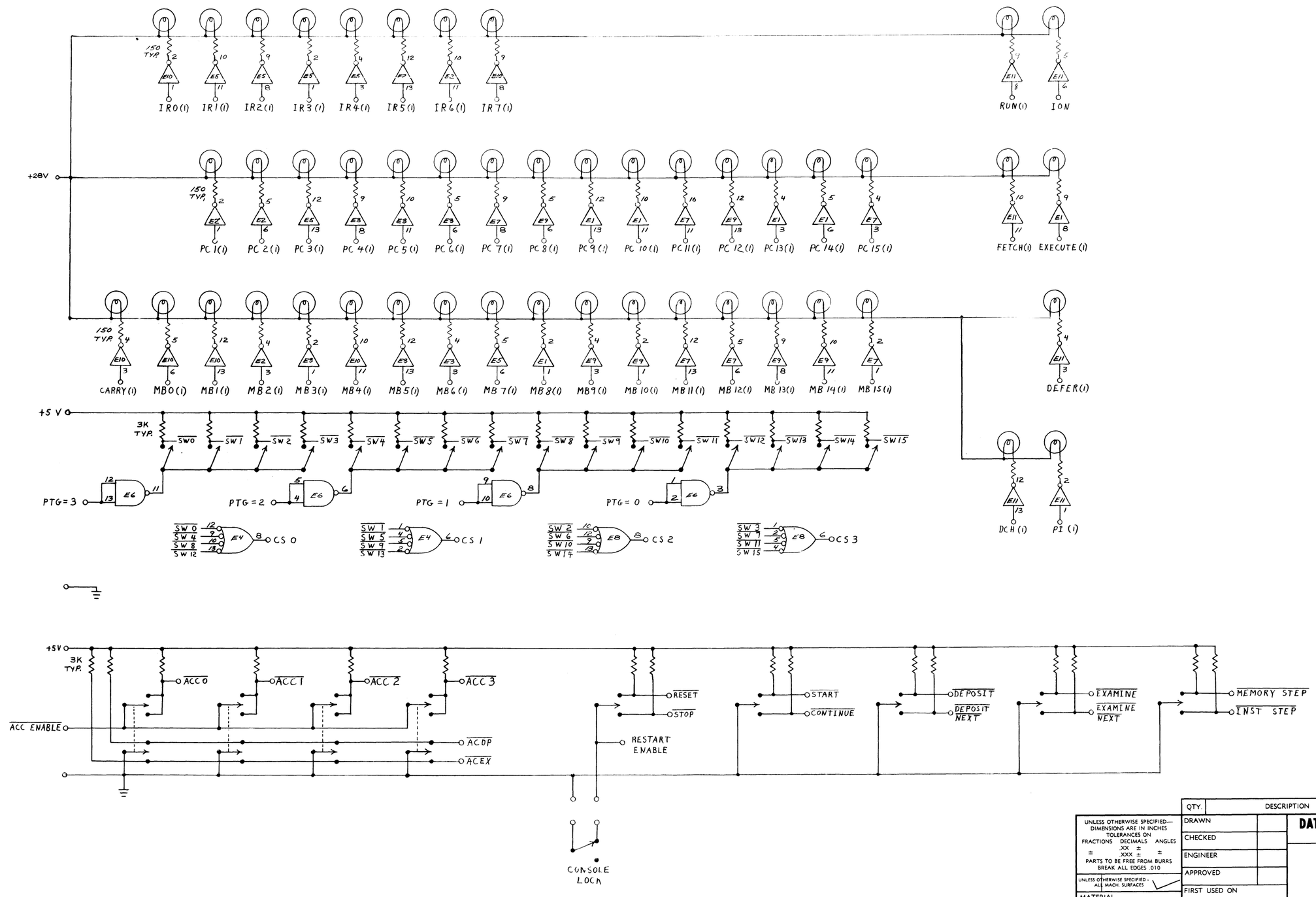

QTY.	DESCRIPTION	PART NO.

UNLESS OTHERWISE SPECIFIED— DIMENSIONS ARE IN INCHES
TOLERANCES ON
FRACTIONS ± DECIMALS .XX ± .XXX ± ANGLES ±
PARTS TO BE FREE FROM BURRS
BREAK ALL EDGES .010
UNLESS OTHERWISE SPECIFIED - ALL MACH. SURFACES
MATERIAL
FINISH

DRAWN
CHECKED
ENGINEER
APPROVED
FIRST USED ON
SHEET OF

DATA GENERAL CORPORATION

TITLE
CONSOLE

SIZE	CODE	DRAWING NUMBER	REV.
D	001	000008	00

THIS DRAWING AND SPECIFICATIONS, HEREIN, ARE THE PROPERTY OF DATA GENERAL CORPORATION AND SHALL NOT BE REPRODUCED OR COPIED OR USED IN WHOLE OR IN PART AS THE BASIS FOR MANUFACTURE OR SALE OF ITEMS WITHOUT WRITTEN PERMISSION.

REVISIONS				
REV.	DESCRIPTION	DRFTG.	APP. BY	DATE

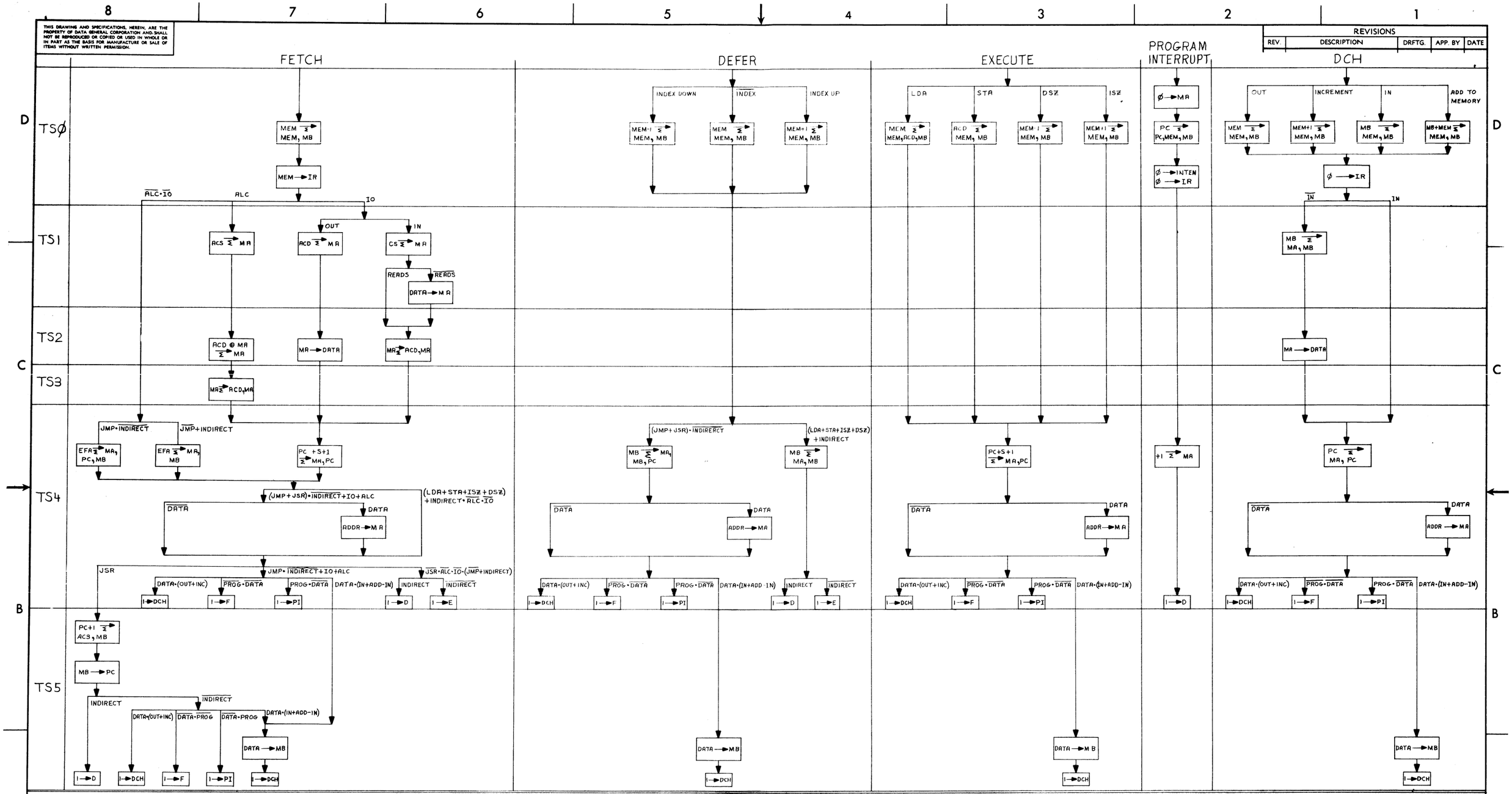

QTY.	DESCRIPTION	PART NO.

UNLESS OTHERWISE SPECIFIED— DIMENSIONS ARE IN INCHES TOLERANCES ON FRACTIONS ± DECIMALS ± .XX ± .XXX ± ANGLES ± PARTS TO BE FREE FROM BURRS BREAK ALL EDGES .010

UNLESS OTHERWISE SPECIFIED: ALL MACH. SURFACES ✓

MATERIAL

FINISH

DRAWN 3/13/69
CHECKED 3/13/69
ENGINEER 3/14/69
APPROVED

FIRST USED ON

SHEET OF

DATA GENERAL CORPORATION

TITLE

FLOW DIAGRAM

SIZE	CODE	DRAWING NUMBER	REV.
D	001	000017	00

THIS DRAWING AND SPECIFICATIONS, HEREIN, ARE THE PROPERTY OF DATA GENERAL CORPORATION AND SHALL NOT BE REPRODUCED OR COPIED OR USED IN WHOLE OR IN PART AS THE BASIS FOR MANUFACTURE OR SALE OF ITEMS WITHOUT WRITTEN PERMISSION.

REVISIONS				
REV.	DESCRIPTION	DRFTG.	APP. BY	DATE

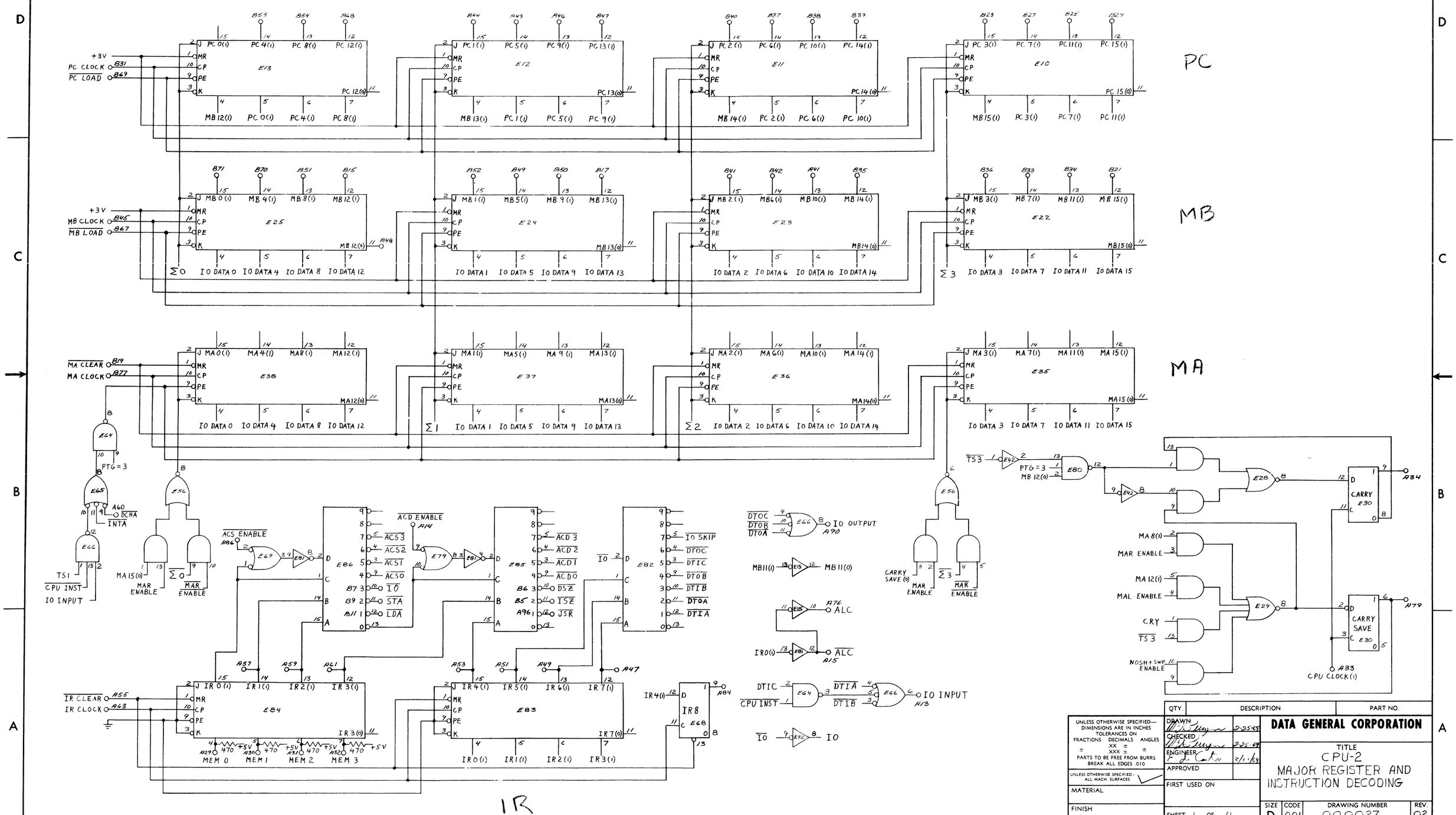

UNLESS OTHERWISE SPECIFIED— DIMENSIONS ARE IN INCHES TOLERANCES ON FRACTIONS ± DECIMALS ± .XX ± .XXX ± ANGLES ± PARTS TO BE FREE FROM BURRS BREAK ALL EDGES .010

UNLESS OTHERWISE SPECIFIED - ALL MACH. SURFACES

MATERIAL

FINISH

QTY.	DESCRIPTION	PART NO.
DRAWN	2-25-69	
CHECKED	2-25-69	
ENGINEER	2/21/69	
APPROVED		
FIRST USED ON		

SHEET 1 OF 4

DATA GENERAL CORPORATION

TITLE
CPU-2
MAJOR REGISTER AND INSTRUCTION DECODING

SIZE	CODE	DRAWING NUMBER	REV.
D	001	000027	02

THIS DRAWING AND SPECIFICATIONS, HEREIN, ARE THE PROPERTY OF DATA GENERAL CORPORATION AND SHALL NOT BE REPRODUCED OR COPIED OR USED IN WHOLE OR IN PART AS THE BASIS FOR MANUFACTURE OR SALE OF ITEMS WITHOUT WRITTEN PERMISSION.

REVISIONS				
REV.	DESCRIPTION	DRFTG.	APP. BY	DATE

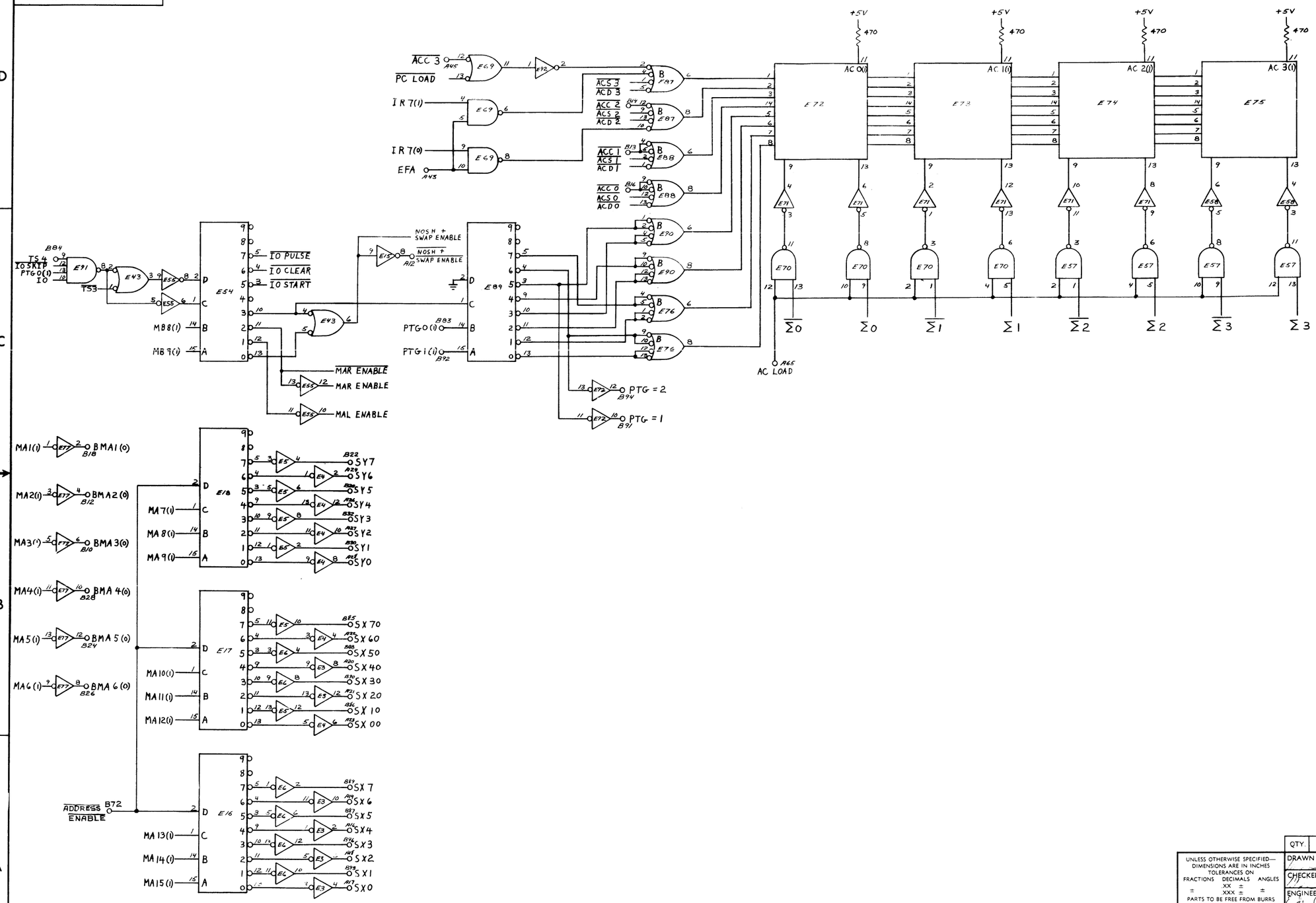

UNLESS OTHERWISE SPECIFIED— DIMENSIONS ARE IN INCHES TOLERANCES ON FRACTIONS ± DECIMALS XX ± XXX ± ANGLES ± PARTS TO BE FREE FROM BURRS BREAK ALL EDGES .010	QTY.	DESCRIPTION	PART NO.
UNLESS OTHERWISE SPECIFIED - ALL MACH. SURFACES ✓	DRAWN		
	CHECKED		
	ENGINEER		
	APPROVED		
MATERIAL	FIRST USED ON		
FINISH	SHEET 2 OF 4		

DATA GENERAL CORPORATION

TITLE
CPU-2
ACCUMULATORS AND
MA DECODING

SIZE	CODE	DRAWING NUMBER	REV.
D	001	00027	02

THIS DRAWING AND SPECIFICATIONS, HEREIN, ARE THE PROPERTY OF DATA GENERAL CORPORATION AND SHALL NOT BE REPRODUCED OR COPIED OR USED IN WHOLE OR IN PART AS THE BASIS FOR MANUFACTURE OR SALE OF ITEMS WITHOUT WRITTEN PERMISSION.

REVISIONS				
REV.	DESCRIPTION	DRFTG.	APP. BY	DATE

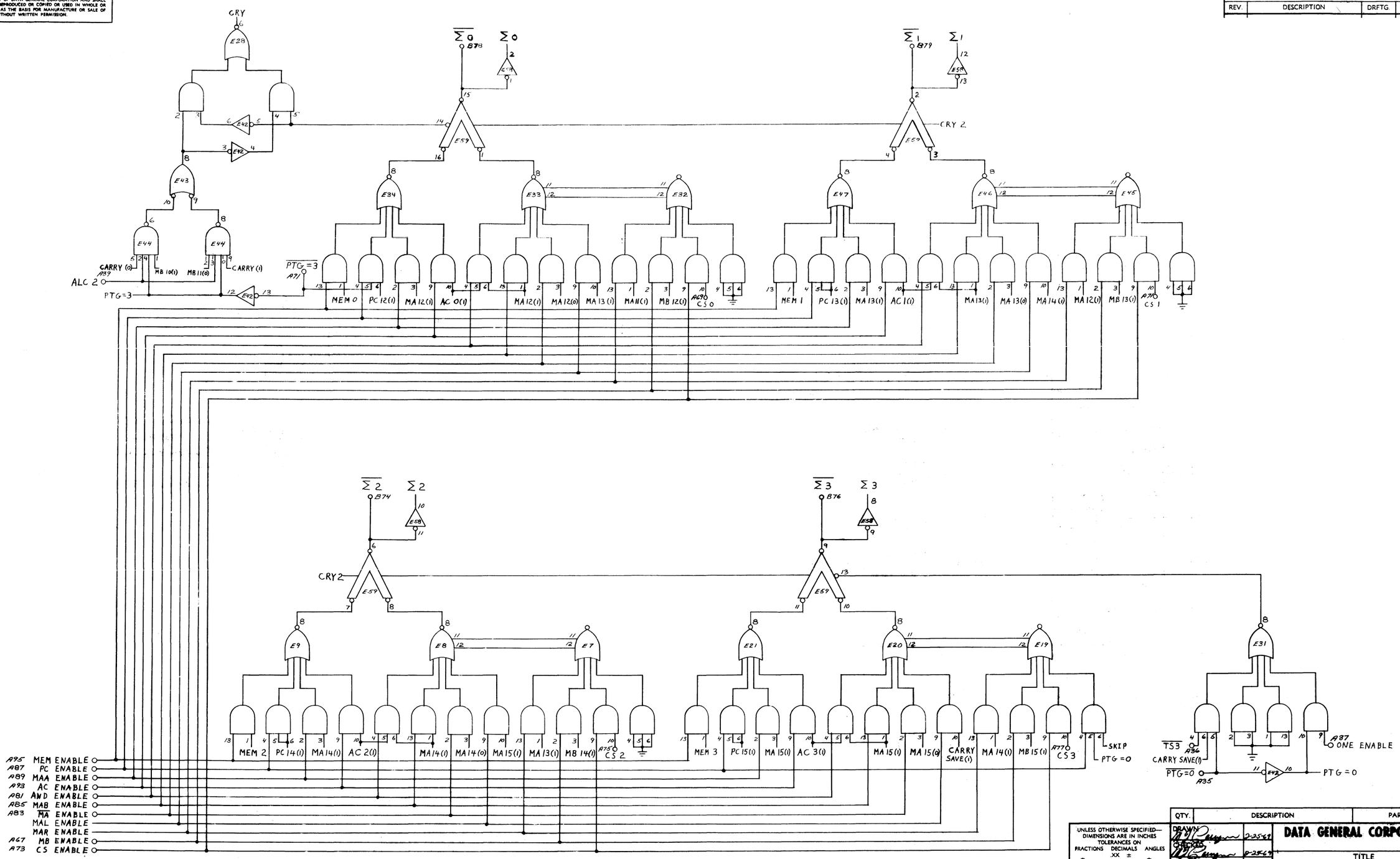

QTY.	DESCRIPTION	PART NO.

UNLESS OTHERWISE SPECIFIED— DIMENSIONS ARE IN INCHES TOLERANCES ON FRACTIONS ± DECIMALS .XX ± .XXX ± ANGLES ± PARTS TO BE FREE FROM BURRS BREAK ALL EDGES .010

UNLESS OTHERWISE SPECIFIED - ALL MACH. SURFACES

MATERIAL

FINISH

DRAWN 2-25-69
CHECKED 2-25-69
ENGINEER 2/21/69
APPROVED

FIRST USED ON

SHEET 3 OF 4

DATA GENERAL CORPORATION

TITLE
CPU-2
REGISTER GATING

SIZE	CODE	DRAWING NUMBER	REV.
D	001	000027	02

THIS DRAWING AND SPECIFICATIONS, HEREIN, ARE THE PROPERTY OF DATA GENERAL CORPORATION AND SHALL NOT BE REPRODUCED OR COPIED OR USED IN WHOLE OR IN PART AS THE BASIS FOR MANUFACTURE OR SALE OF ITEMS WITHOUT WRITTEN PERMISSION.

REVISIONS				
REV.	DESCRIPTION	DRFTG.	APP. BY	DATE

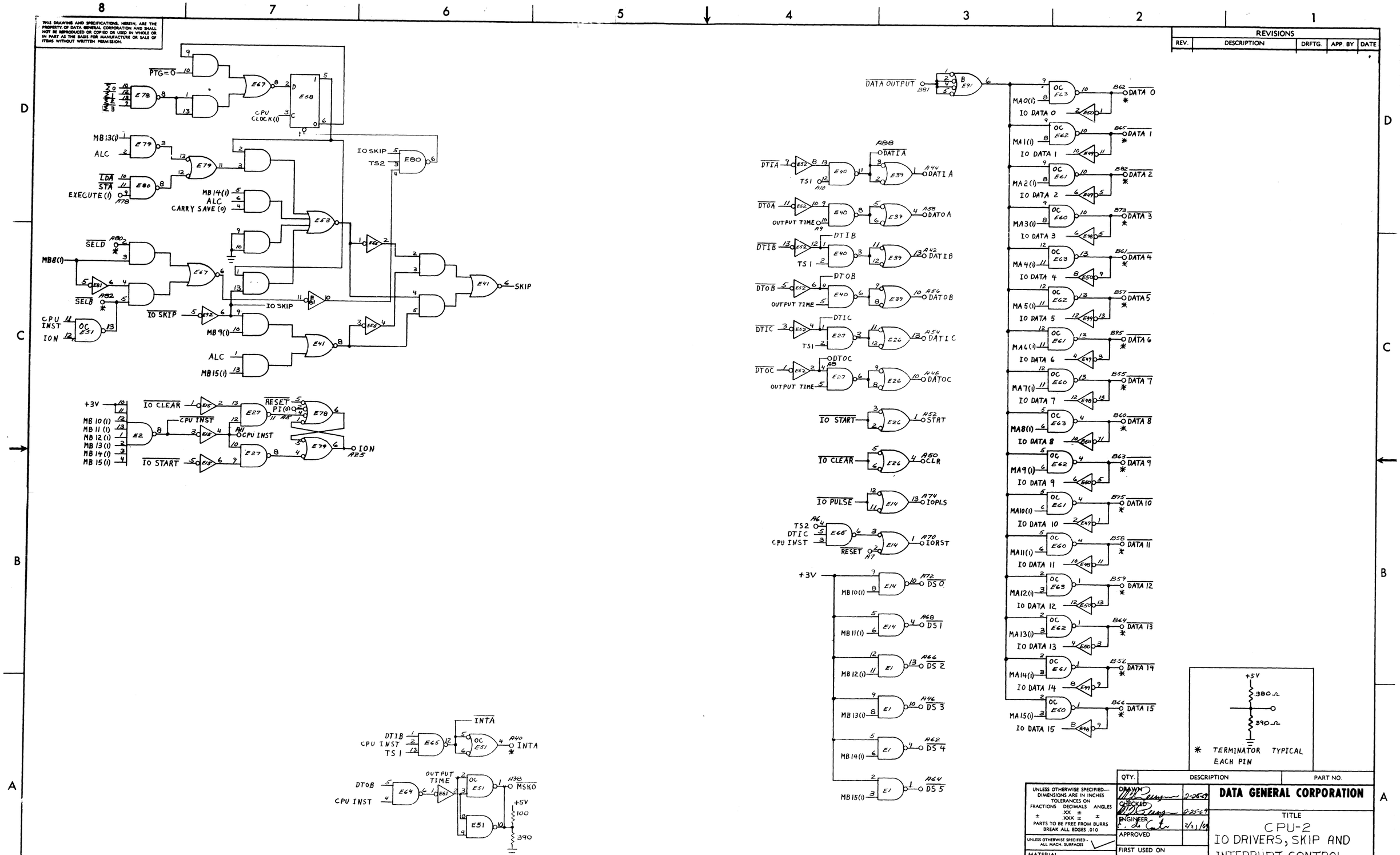

QTY.	DESCRIPTION	PART NO.

UNLESS OTHERWISE SPECIFIED— DIMENSIONS ARE IN INCHES
TOLERANCES ON
FRACTIONS ± DECIMALS XX ± XXX ± ANGLES ±
PARTS TO BE FREE FROM BURRS
BREAK ALL EDGES .010

UNLESS OTHERWISE SPECIFIED - ALL MACH. SURFACES

MATERIAL

FINISH

DRAWN 0-25-69
CHECKED 0-25-69
ENGINEER 2/23/69
APPROVED

FIRST USED ON

SHEET 4 OF 4

DATA GENERAL CORPORATION

TITLE
CPU-2
IO DRIVERS, SKIP AND INTERRUPT CONTROL

SIZE	CODE	DRAWING NUMBER	REV.
D	001	000027	02

THIS DRAWING AND SPECIFICATIONS, HEREIN, ARE THE PROPERTY OF DATA GENERAL CORPORATION AND SHALL NOT BE REPRODUCED OR COPIED OR USED IN WHOLE OR IN PART AS THE BASIS FOR MANUFACTURE OR SALE OF ITEMS WITHOUT WRITTEN PERMISSION.

REVISIONS				
REV.	DESCRIPTION	DRFTG.	APP. BY	DATE

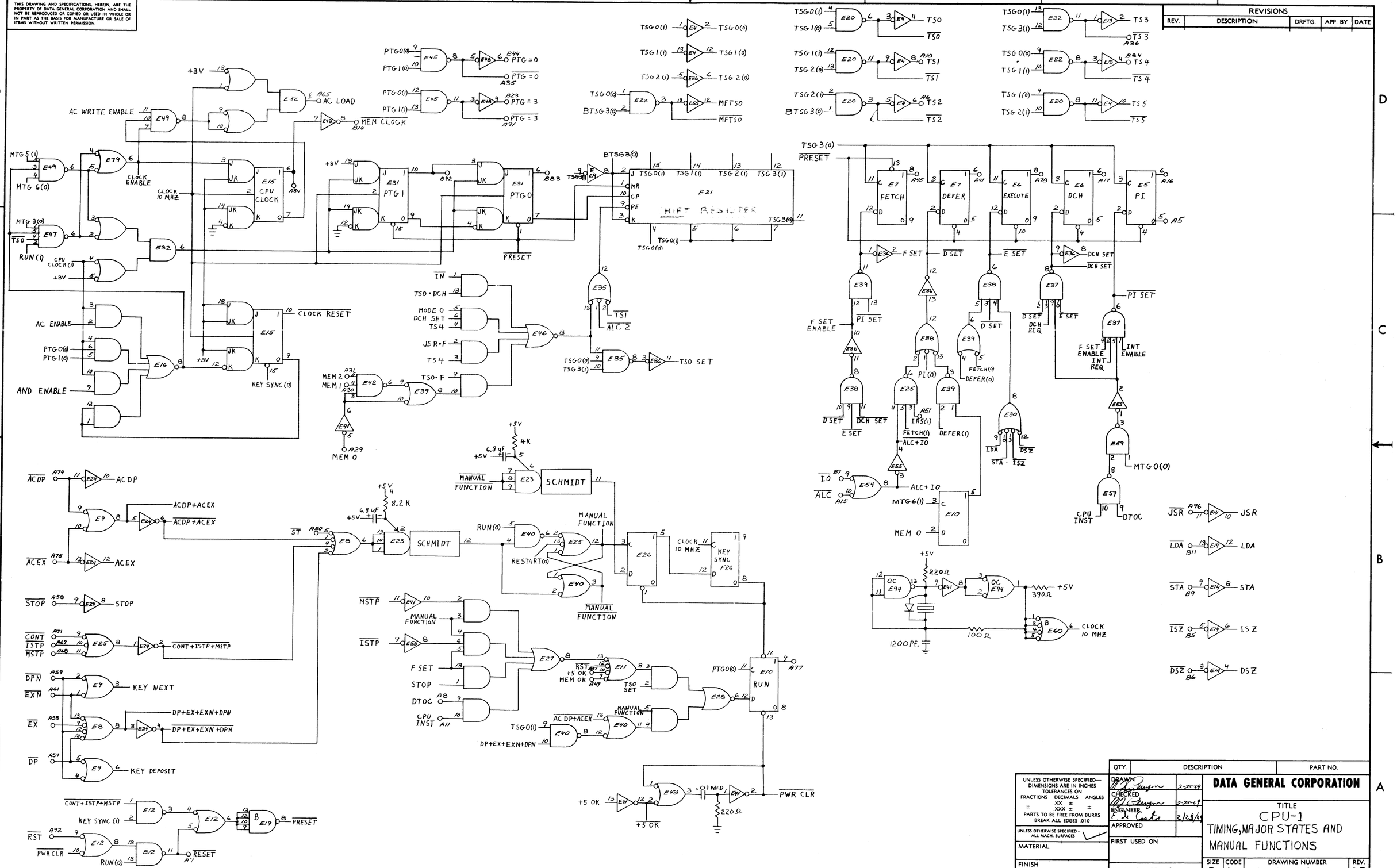

QTY.	DESCRIPTION	PART NO.

UNLESS OTHERWISE SPECIFIED— DIMENSIONS ARE IN INCHES TOLERANCES ON FRACTIONS ± DECIMALS .XX ± .XXX ± ANGLES ± PARTS TO BE FREE FROM BURRS BREAK ALL EDGES .010

UNLESS OTHERWISE SPECIFIED - ALL MACH. SURFACES

MATERIAL

FINISH

DRAWN		2-25-69
CHECKED		2-25-69
ENGINEER		2/25/69
APPROVED		
FIRST USED ON		
SHEET 1 OF 3		

DATA GENERAL CORPORATION

TITLE
CPU-1
TIMING, MAJOR STATES AND MANUAL FUNCTIONS

SIZE	CODE	DRAWING NUMBER	REV.
D	001	000026	05

THIS DRAWING AND SPECIFICATIONS, HEREIN, ARE THE PROPERTY OF DATA GENERAL CORPORATION AND SHALL NOT BE REPRODUCED OR COPIED OR USED IN WHOLE OR IN PART AS THE BASIS FOR MANUFACTURE OR SALE OF ITEMS WITHOUT WRITTEN PERMISSION.

REVISIONS				
REV.	DESCRIPTION	DRFTG.	APP. BY	DATE

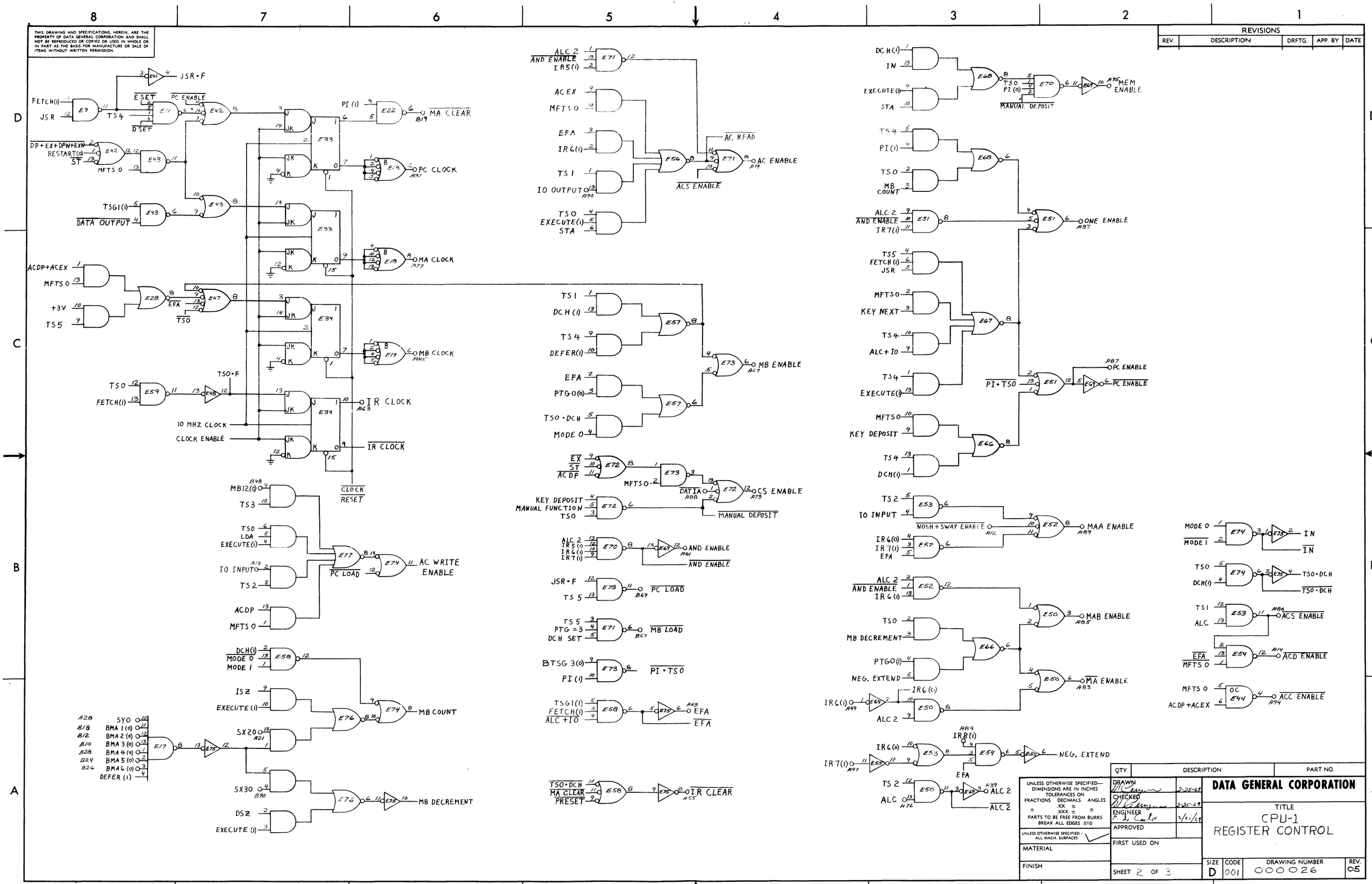

QTY.	DESCRIPTION	PART NO.

UNLESS OTHERWISE SPECIFIED— DIMENSIONS ARE IN INCHES TOLERANCES ON FRACTIONS ± DECIMALS XX ± XXX ± ANGLES ± PARTS TO BE FREE FROM BURRS BREAK ALL EDGES .010

UNLESS OTHERWISE SPECIFIED - ALL MACH. SURFACES

MATERIAL

FINISH

DRAWN 2-25-69

CHECKED 2-25-69

ENGINEER 2/25/69

APPROVED

FIRST USED ON

SHEET 2 OF 3

DATA GENERAL CORPORATION

TITLE
CPU-1
REGISTER CONTROL

SIZE	CODE	DRAWING NUMBER	REV.
D	001	000026	05

THE DRAWINGS AND SPECIFICATIONS, HEREIN, ARE THE PROPERTY OF DATA GENERAL CORPORATION AND SHALL NOT BE REPRODUCED OR COPIED OR USED IN WHOLE OR IN PART AS THE BASIS FOR MANUFACTURE OR SALE OF ITEMS WITHOUT WRITTEN PERMISSION.

REVISIONS				
REV.	DESCRIPTION	DRFTG.	APP. BY	DATE

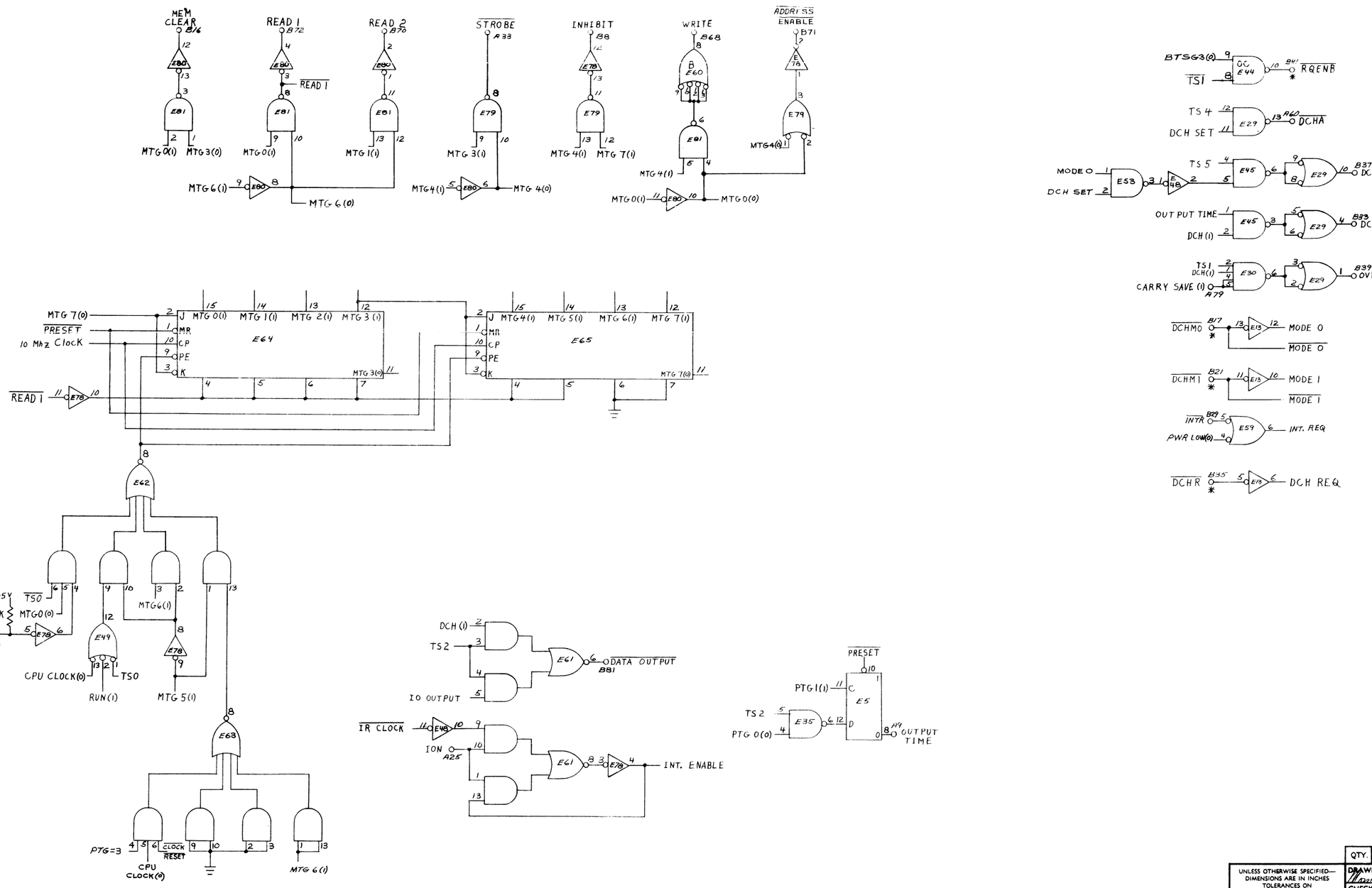

QTY.	DESCRIPTION	PART NO.

UNLESS OTHERWISE SPECIFIED— DIMENSIONS ARE IN INCHES TOLERANCES ON FRACTIONS ± DECIMALS .XX ± .XXX ± ANGLES ± PARTS TO BE FREE FROM BURRS BREAK ALL EDGES .010

UNLESS OTHERWISE SPECIFIED - ALL MACH. SURFACES

MATERIAL

FINISH

DRAWN 2-25-69
CHECKED 2-25-69
ENGINEER 2/21/69
APPROVED

FIRST USED ON

SHEET 3 OF 3

DATA GENERAL CORPORATION

TITLE
CPU-1
MEMORY CONTROL
AND IO

SIZE	CODE	DRAWING NUMBER	REV
D	001	000026	05

THIS DRAWING AND SPECIFICATIONS, HEREIN, ARE THE PROPERTY OF DATA GENERAL CORPORATION AND SHALL NOT BE REPRODUCED OR COPIED OR USED IN WHOLE OR IN PART AS THE BASIS FOR MANUFACTURE OR SALE OF ITEMS WITHOUT WRITTEN PERMISSION.

REVISIONS				
REV.	DESCRIPTION	DRFTG.	APP. BY	DATE

MEMORY TIME GENERATOR CORE MEMORY

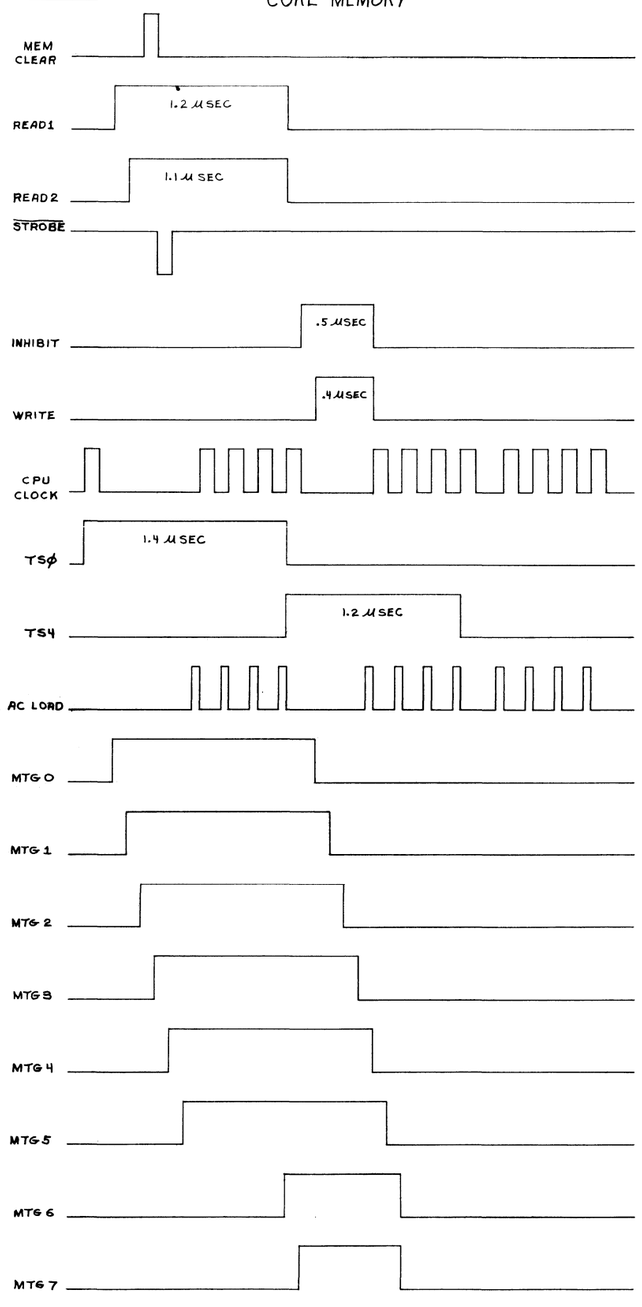

SEE NOTE 1

MEMORY TIME GENERATOR READ ONLY STORAGE

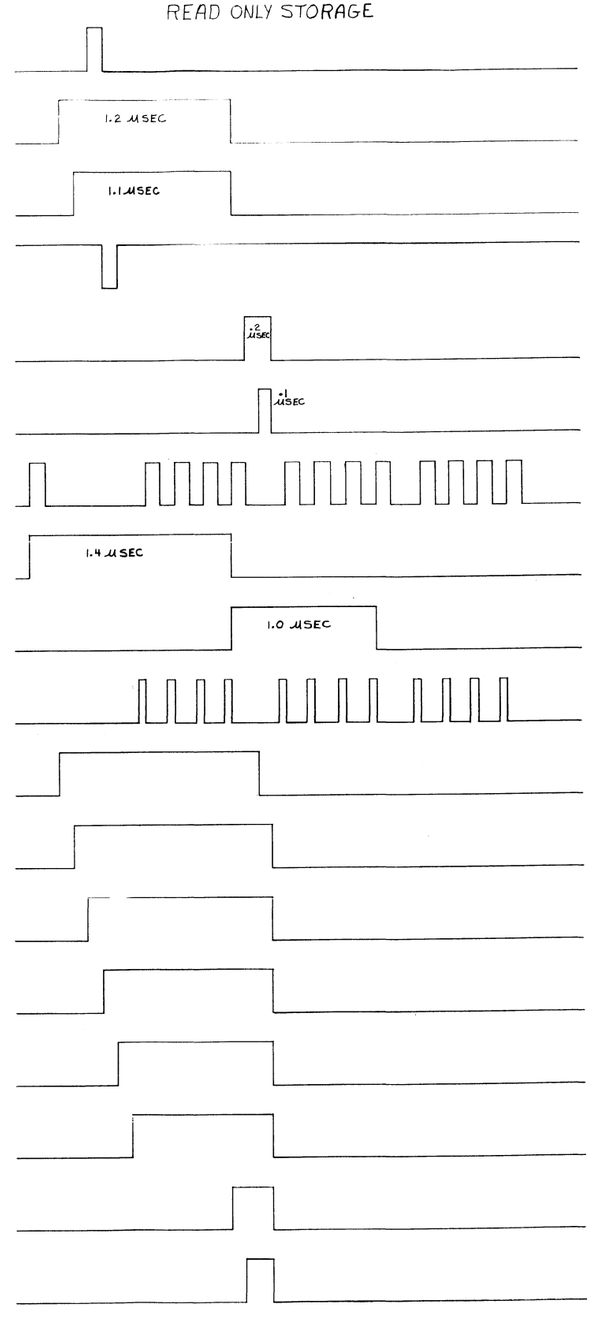

TIME STATE GENERATOR

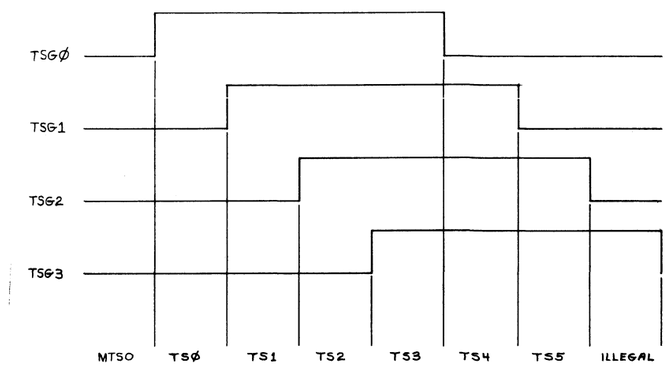

NOTE:
(1) MAY BE TS1, SEE FLOW DIAGRAM 101-000017.
(2) DURING STA INSTRUCTION, TSØ IS 1.7 μSEC AND CPU CLOCK IS SPACED EVERY .3 μSEC MAKING READ 1 AND READ 2 .3 μSEC LONGER.
(3) WHILE ACCESSING AN ACCUMULATOR, TIME-STATES BECOME .3 μSEC LONGER AND CPU CLOCK IS SPACED EVERY .3 μSEC.

QTY.	DESCRIPTION	PART NO.

UNLESS OTHERWISE SPECIFIED— DIMENSIONS ARE IN INCHES
TOLERANCES ON
FRACTIONS ± DECIMALS .XX ± .XXX ± ANGLES ±
PARTS TO BE FREE FROM BURRS
BREAK ALL EDGES .010
UNLESS OTHERWISE SPECIFIED - ALL MACH. SURFACES
MATERIAL
FINISH

DRAWN		3-17-69
CHECKED		3-17-69
ENGINEER		3-17-69
APPROVED		
FIRST USED ON		
SHEET 1 OF 1		

DATA GENERAL CORPORATION

TITLE
TIMING DIAGRAM

SIZE	CODE	DRAWING NUMBER	REV.
D	001	000018	00

THIS DRAWING AND SPECIFICATIONS, HEREIN, ARE THE PROPERTY OF DATA GENERAL CORPORATION AND SHALL NOT BE REPRODUCED OR COPIED OR USED IN WHOLE OR IN PART AS THE BASIS FOR MANUFACTURE OR SALE OF ITEMS WITHOUT WRITTEN PERMISSION.

REVISIONS				
REV.	DESCRIPTION	DRFTG.	APP. BY	DATE

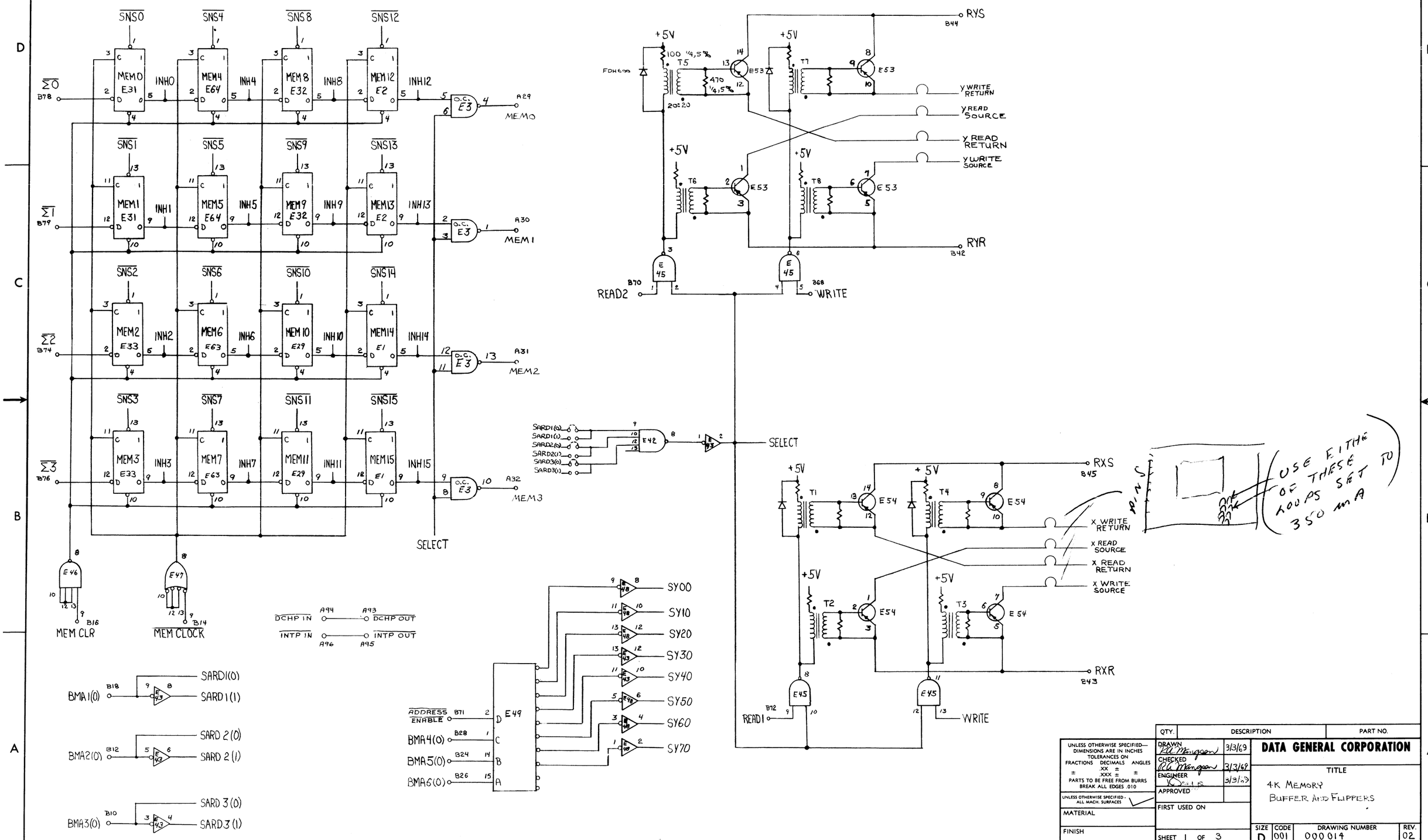

QTY.	DESCRIPTION	PART NO.

UNLESS OTHERWISE SPECIFIED— DIMENSIONS ARE IN INCHES TOLERANCES ON FRACTIONS ± DECIMALS .XX ± .XXX ± ANGLES ± PARTS TO BE FREE FROM BURRS BREAK ALL EDGES .010

UNLESS OTHERWISE SPECIFIED - ALL MACH. SURFACES ✓

MATERIAL

FINISH

DRAWN Pete Mangson 3/3/69
CHECKED Pete Mangson 3/3/69
ENGINEER 3/3/69
APPROVED
FIRST USED ON
SHEET 1 OF 3

DATA GENERAL CORPORATION

TITLE
4K MEMORY
BUFFER AND FLIPPERS

SIZE	CODE	DRAWING NUMBER	REV.
D	001	000014	02

THIS DRAWING AND SPECIFICATIONS, HEREIN, ARE THE PROPERTY OF DATA GENERAL CORPORATION AND SHALL NOT BE REPRODUCED OR COPIED OR USED IN WHOLE OR IN PART AS THE BASIS FOR MANUFACTURE OR SALE OF ITEMS WITHOUT WRITTEN PERMISSION.

REVISIONS				
REV.	DESCRIPTION	DRFTG.	APP. BY	DATE

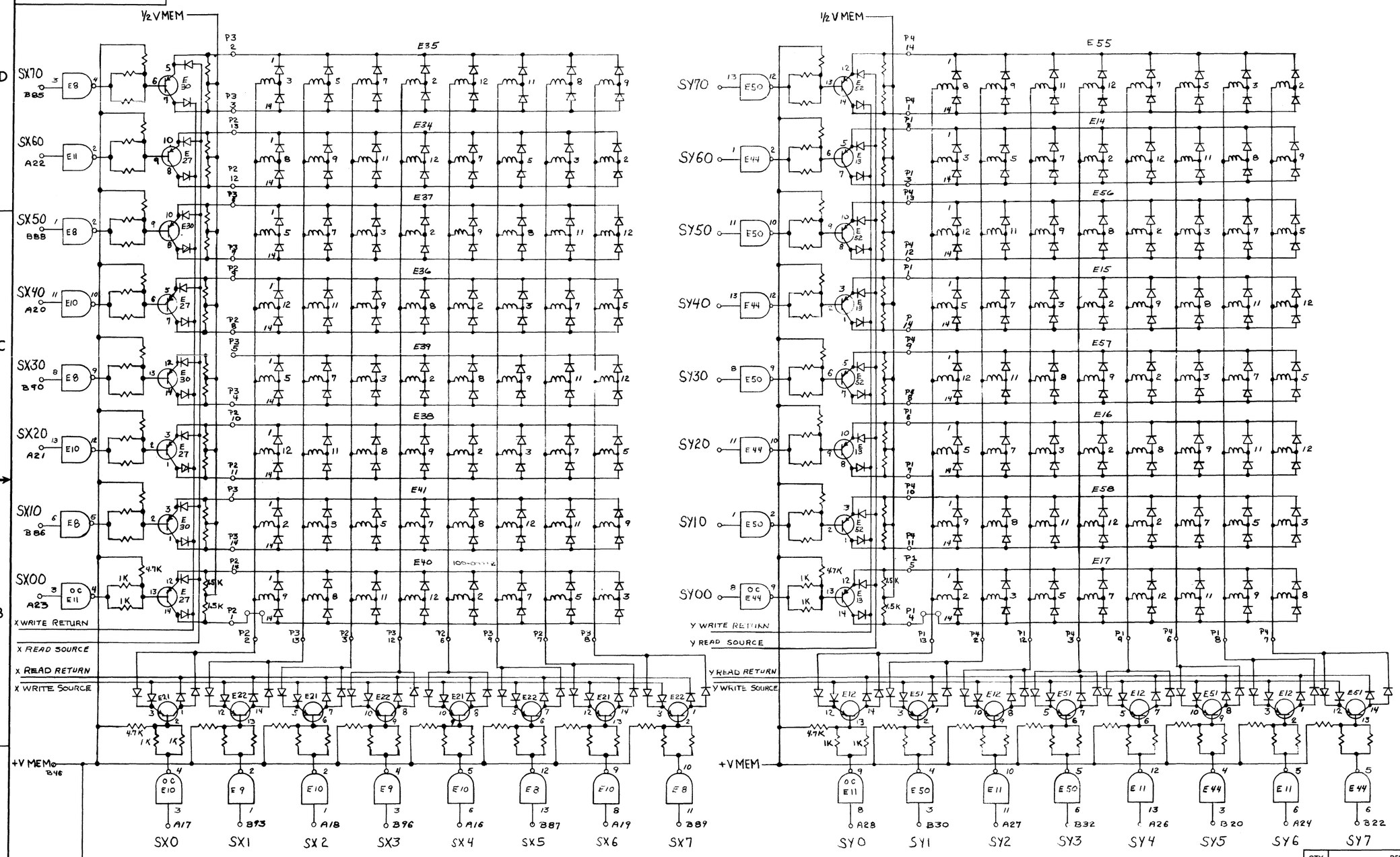

UNLESS OTHERWISE SHOWN:
1 RESISTORS ARE 1/4W 5%
2 DIODES ARE FDH 600

QTY.	DESCRIPTION	PART NO.

UNLESS OTHERWISE SPECIFIED— DIMENSIONS ARE IN INCHES
TOLERANCES ON
FRACTIONS ± DECIMALS .XX ± .XXX ± ANGLES ±
PARTS TO BE FREE FROM BURRS
BREAK ALL EDGES .010

UNLESS OTHERWISE SPECIFIED - ALL MACH. SURFACES

MATERIAL

FINISH

DRAWN 3/3/69
CHECKED 3/3/69
ENGINEER
APPROVED

FIRST USED ON

SHEET 2 OF 3

DATA GENERAL CORPORATION

TITLE
4K MEMORY
X Y DRIVE

SIZE	CODE	DRAWING NUMBER	REV.
D	001	000014	02

THIS DRAWING AND SPECIFICATIONS, HEREIN, ARE THE PROPERTY OF DATA GENERAL CORPORATION AND SHALL NOT BE REPRODUCED OR COPIED OR USED IN WHOLE OR IN PART AS THE BASIS FOR MANUFACTURE OR SALE OF ITEMS WITHOUT WRITTEN PERMISSION.

REVISIONS				
REV.	DESCRIPTION	DRFTG.	APP. BY	DATE

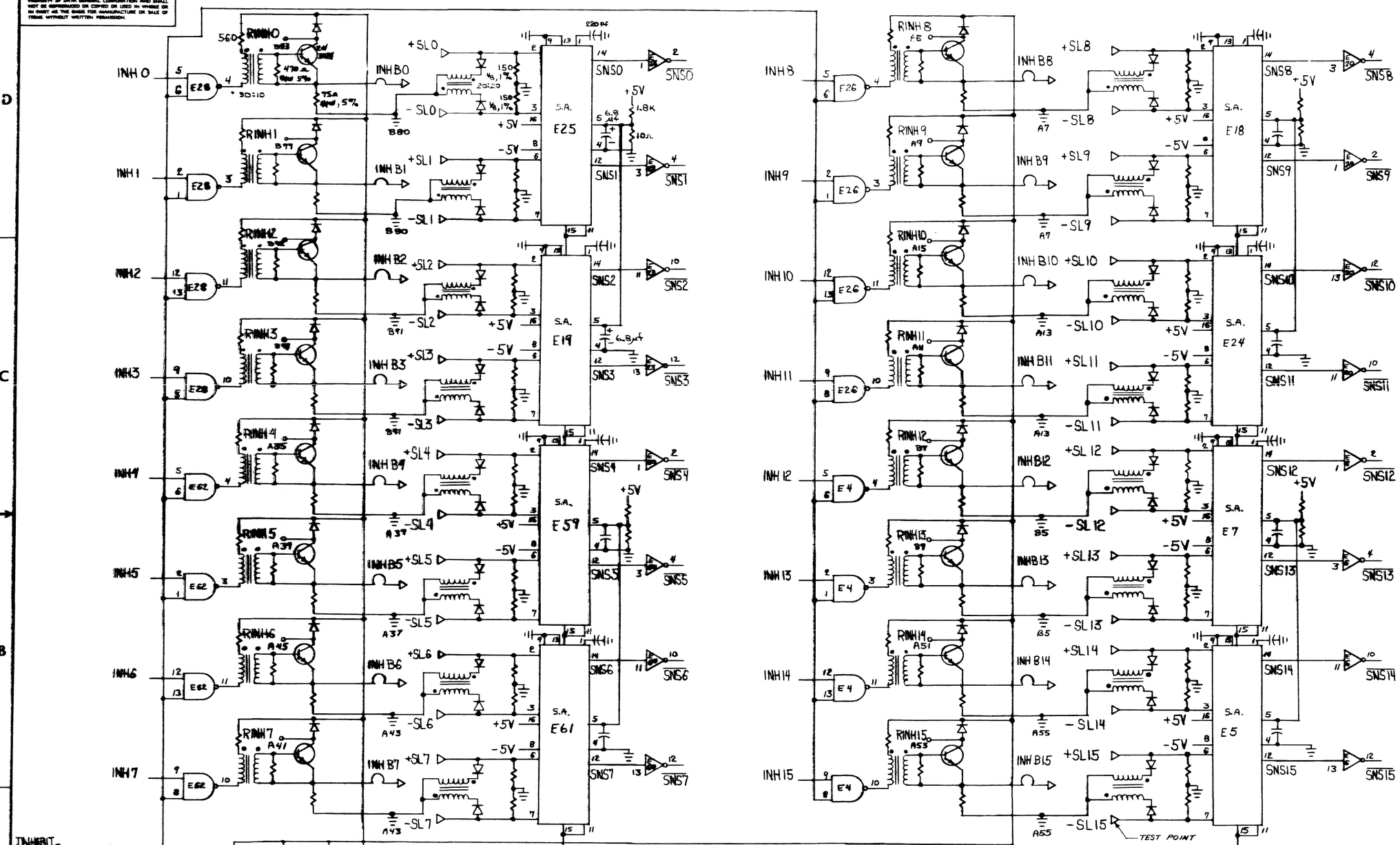

UNLESS OTHERWISE SPECIFIED— DIMENSIONS ARE IN INCHES TOLERANCES ON FRACTIONS DECIMALS ANGLES ± .XX ± ± .XXX ± ± PARTS TO BE FREE FROM BURRS BREAK ALL EDGES .010	QTY.	DESCRIPTION	PART NO.
UNLESS OTHERWISE SPECIFIED - ALL MACH. SURFACES	DRAWN	3/3/63	DATA GENERAL CORPORATION
	CHECKED	3/3/63	
	ENGINEER	3/3/63	TITLE 4K MEMORY
	APPROVED		
MATERIAL	FIRST USED ON		
FINISH	SHEET 3 OF 3		SIZE D · CODE 021 · DRAWING NUMBER 000014 · REV. 02

THIS DRAWING AND SPECIFICATIONS, HEREIN, ARE THE PROPERTY OF DATA GENERAL CORPORATION AND SHALL NOT BE REPRODUCED OR COPIED OR USED IN WHOLE OR IN PART AS THE BASIS FOR MANUFACTURE OR SALE OF ITEMS WITHOUT WRITTEN PERMISSION.

REVISIONS				
REV.	DESCRIPTION	DRFTG.	APP. BY	DATE

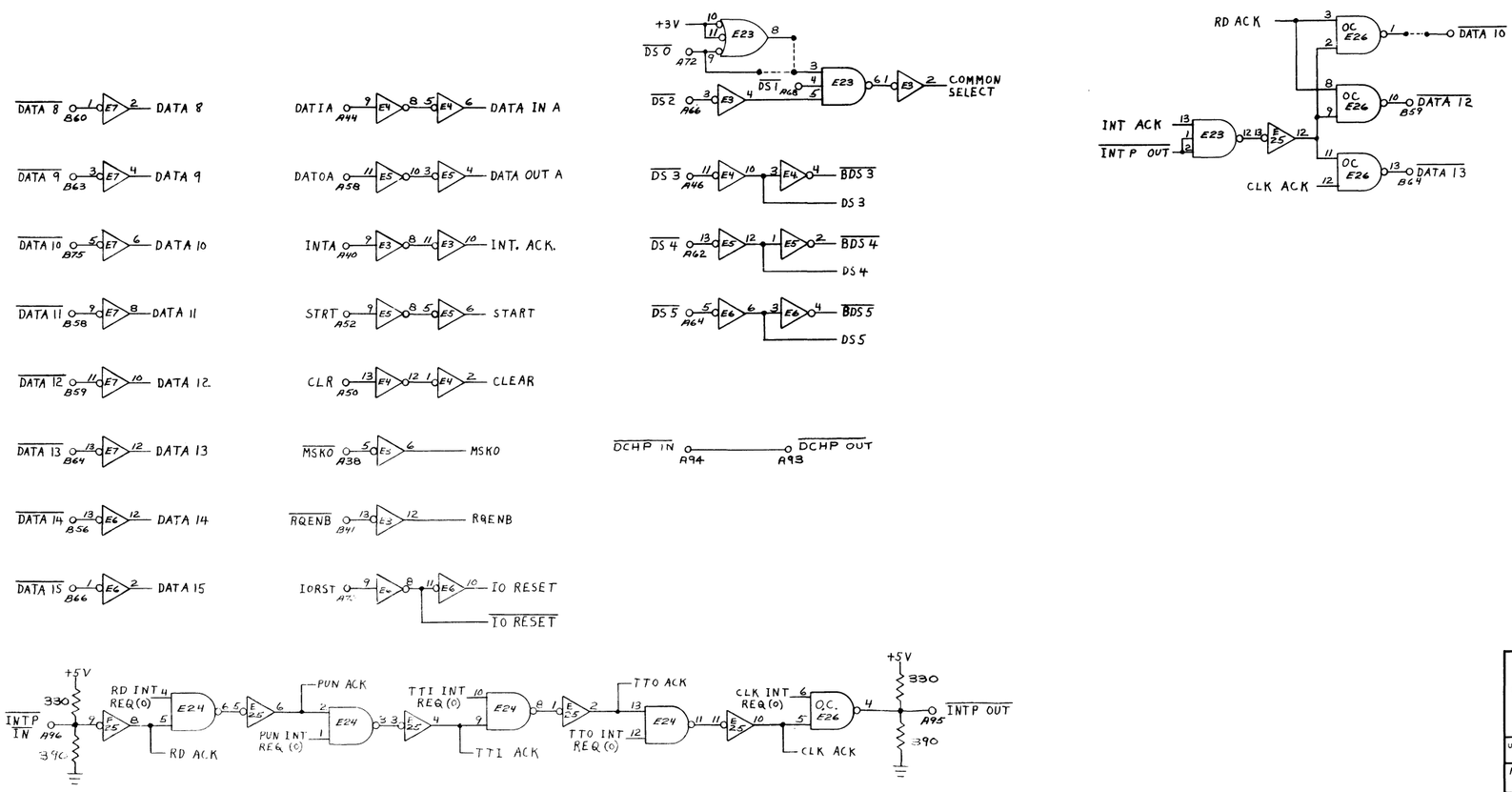

QTY.	DESCRIPTION	PART NO.

UNLESS OTHERWISE SPECIFIED— DIMENSIONS ARE IN INCHES TOLERANCES ON FRACTIONS ± DECIMALS .XX ± .XXX ± ANGLES ± PARTS TO BE FREE FROM BURRS BREAK ALL EDGES .010

UNLESS OTHERWISE SPECIFIED - ALL MACH. SURFACES

MATERIAL

FINISH

DRAWN

CHECKED

ENGINEER

APPROVED

FIRST USED ON

SHEET OF

DATA GENERAL CORPORATION

TITLE
IO BUS RECEIVERS
&
COMMON SELECT

SIZE	CODE	DRAWING NUMBER	REV.
D	001	000001	02

THIS DRAWING AND SPECIFICATIONS, HEREIN, ARE THE PROPERTY OF DATA GENERAL CORPORATION AND SHALL NOT BE REPRODUCED OR COPIED OR USED IN WHOLE OR IN PART AS THE BASIS FOR MANUFACTURE OR SALE OF ITEMS WITHOUT WRITTEN PERMISSION.

REVISIONS				
REV.	DESCRIPTION	DRFTG.	APP. BY	DATE

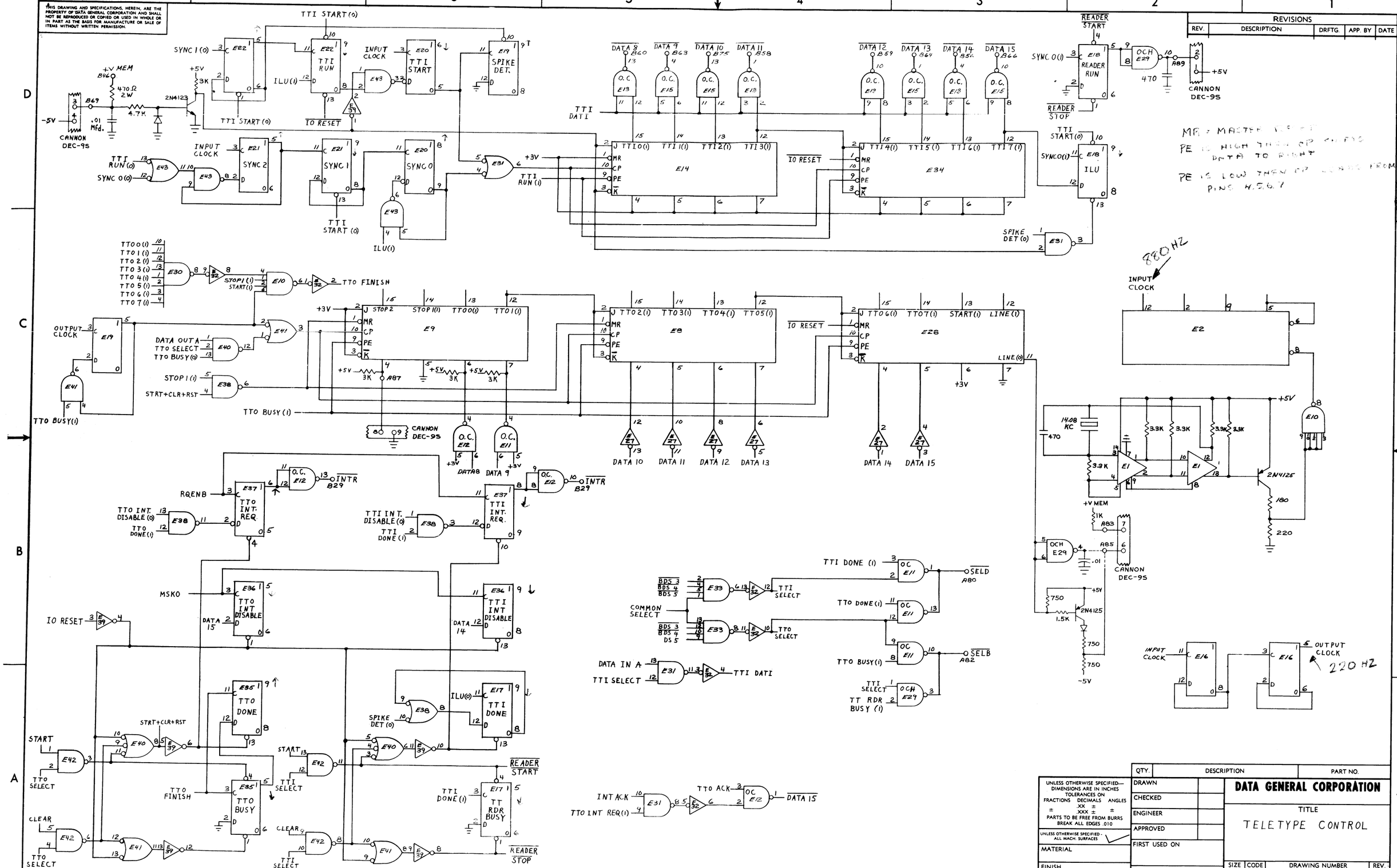

QTY.	DESCRIPTION	PART NO.
DRAWN		
CHECKED		
ENGINEER		
APPROVED		
FIRST USED ON		
SHEET OF		

UNLESS OTHERWISE SPECIFIED— DIMENSIONS ARE IN INCHES
TOLERANCES ON
FRACTIONS ± DECIMALS .XX ± .XXX ± ANGLES ±
PARTS TO BE FREE FROM BURRS
BREAK ALL EDGES .010
UNLESS OTHERWISE SPECIFIED - ALL MACH. SURFACES
MATERIAL
FINISH

DATA GENERAL CORPORATION

TITLE
TELETYPE CONTROL

SIZE	CODE	DRAWING NUMBER	REV.
D	001	000025	02

THIS DRAWING AND SPECIFICATIONS, HEREIN, ARE THE PROPERTY OF DATA GENERAL CORPORATION AND SHALL NOT BE REPRODUCED OR COPIED OR USED IN WHOLE OR IN PART AS THE BASIS FOR MANUFACTURE OR SALE OF ITEMS WITHOUT WRITTEN PERMISSION.

REVISIONS				
REV.	DESCRIPTION	DRFTG.	APP. BY	DATE

TELETYPE RELAY BOARD

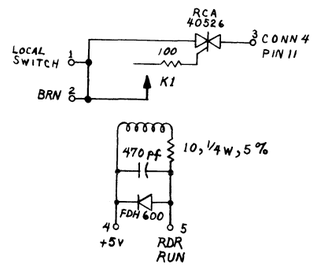

QTY	DESCRIPTION	PART NO.
1	PC BOARD	107-000006-02
1	RCA 40526 TRIAC	101-000038-00
1	10 1/4W, 5% RESISTOR	102-000015-00
1	100 1/4 W, 5% RESISTOR	102-000039-00
1	470 pf CAPACITOR	103-000004-00
1	DIODE FDH600	101-000002-00
1	K1 RBM RELAY 99-401242-3	110-000001-00

4010 CONNECTOR WIRING FOR TELETYPE OPTION

CANNON DEC-9S — BACK PANEL NOVA

PIN	SIGNAL	PIN
1	+ 5 VOLTS	ANY PIN 3, 4, 97 OR 98
2	RD RUN	3 A 89
3	TT IN	3 B 69
4		F3
5	SPARE	
6	TTOUT	3 A 85
7		F6
8	DATA IN STOP	3 A 87
9		F8

CANNON DEC 9P — CABLE — IN TELETYPE

PIN	COLOR	SIGNAL	P C B	TERM STRIP PIN	
1	RED	+ 5 VOLTS	+ 5 VOLTS		TWISTED
2	BLK	RD RUN	RD RUN		PAIR
3	GRN	TT IN		3	TWISTED
4	BLUE	- 5 VOLTS		4	PAIR
5		SPARE			
6	WHT	TTOUT		6	TWISTED
7	ORANGE	+ V		7	PAIR
8				JUMPER IN DEC 9P 8, 9	
9					

F CONNECTOR WIRING FOR CAE TRANSLATOR

AMPHENOL 17-10090 — BACK PANEL NOVA

PIN	SIGNAL	PIN
1	SPARE	
2	SPARE	
3	4010 PIN 4	
4	-5 VOLTS	3A6
5	SPARE	
6	4010 PIN 7	
7	+V	3A83
8	4010 PIN 9	
9	GND	ANY PIN 1, 2, 99 OR 100

AMPHENOL 17-20090 — 6' CABLE CAE # 33666-01-3817 IN TRANSLATOR

PIN	WIRE #	SIGNAL	P1	TRANSLATOR
1				
2				
3	3	TX RELAY	3	2J3 PIN 3
4	4	TX RELAY	4	2J3 PIN 4
5				
6	1	-RX	1	2J3 PIN 1
7	2 & 5	+RX & COM	2 & 5	2J3 PIN 2 AND 5
8		JUMPER IN PLUG F		
9				

NOTE:
CABLE IS 13 FEET OVERALL, 6 CONDUCTOR, 3 TWISTED PAIR

UNLESS OTHERWISE SPECIFIED— DIMENSIONS ARE IN INCHES
TOLERANCES ON
FRACTIONS ± DECIMALS .XX ± .XXX ± ANGLES ±
PARTS TO BE FREE FROM BURRS
BREAK ALL EDGES .010
UNLESS OTHERWISE SPECIFIED - ALL MACH. SURFACES
MATERIAL
FINISH

QTY.	DESCRIPTION	PART NO.
DRAWN		
CHECKED		
ENGINEER		
APPROVED		
FIRST USED ON		
SHEET OF		

DATA GENERAL CORPORATION

TITLE
TELETYPE RELAY BOARD AND CONNECTOR WIRING LIST

SIZE	CODE	DRAWING NUMBER	REV.
D	001	000013	01

THIS DRAWING AND SPECIFICATIONS, HEREIN, ARE THE PROPERTY OF DATA GENERAL CORPORATION AND SHALL NOT BE REPRODUCED OR COPIED OR USED IN WHOLE OR IN PART AS THE BASIS FOR MANUFACTURE OR SALE OF ITEMS WITHOUT WRITTEN PERMISSION.

REVISIONS				
REV.	DESCRIPTION	DRFTG.	APP. BY	DATE

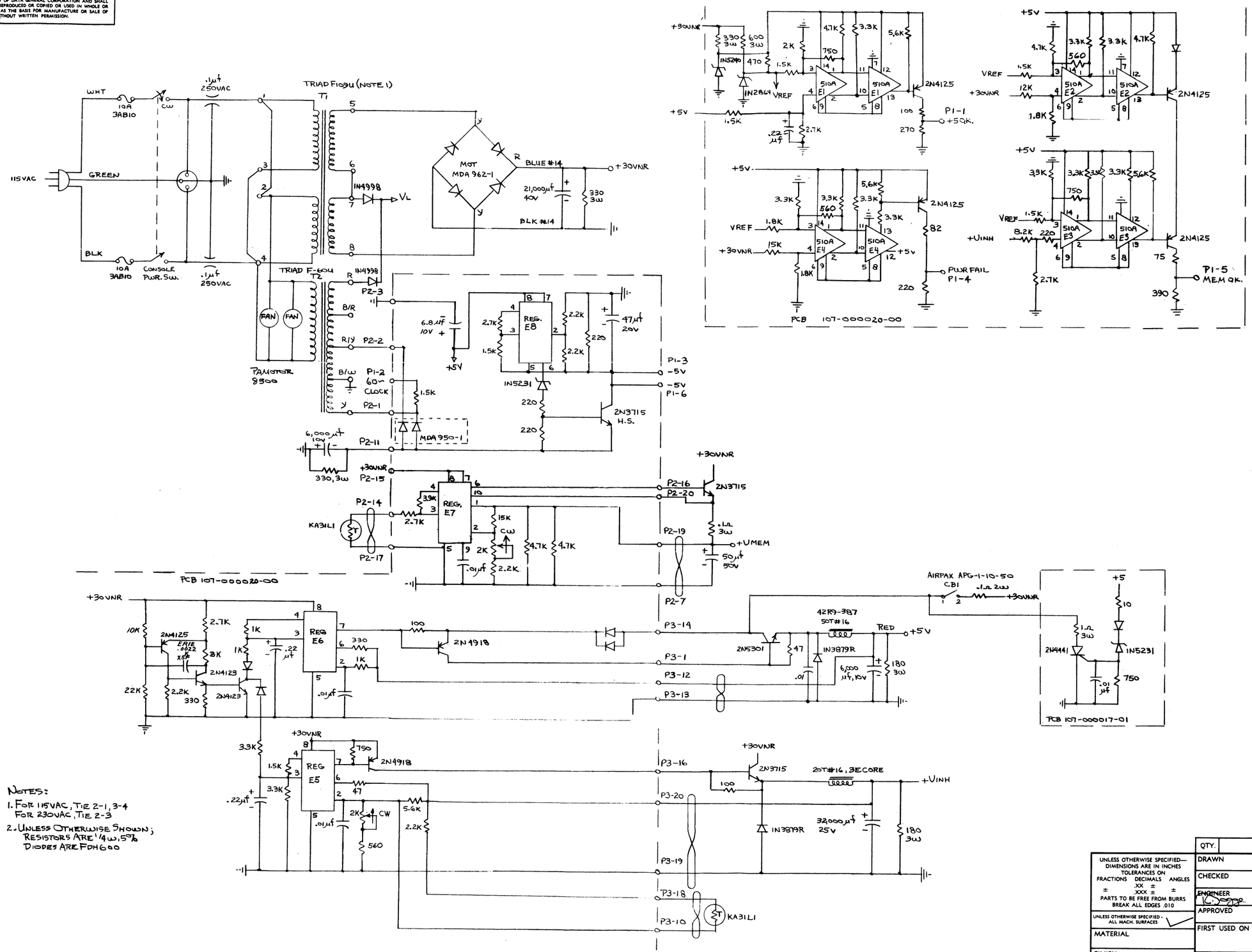

NOTES:

1. FOR 115VAC, TIE 2-1, 3-4
   FOR 230VAC, TIE 2-3
2. UNLESS OTHERWISE SHOWN;
   RESISTORS ARE 1/4W, 5%
   DIODES ARE FDH600

QTY.	DESCRIPTION	PART NO.

UNLESS OTHERWISE SPECIFIED— DIMENSIONS ARE IN INCHES
TOLERANCES ON
FRACTIONS ± DECIMALS .XX ± .XXX ± ANGLES ±
PARTS TO BE FREE FROM BURRS
BREAK ALL EDGES .010

UNLESS OTHERWISE SPECIFIED - ALL MACH. SURFACES

MATERIAL

FINISH

DRAWN	3/3/69	
CHECKED		
ENGINEER	3/3/69	
APPROVED		
FIRST USED ON		
SHEET OF		

DATA GENERAL CORPORATION

TITLE

NOVA POWER SUPPLY

SIZE	CODE	DRAWING NUMBER	REV.
D	001	000015	01

THIS DRAWING AND SPECIFICATIONS, HEREIN, ARE THE PROPERTY OF DATA GENERAL CORPORATION AND SHALL NOT BE REPRODUCED OR COPIED OR USED IN WHOLE OR IN PART AS THE BASIS FOR MANUFACTURE OR SALE OF ITEMS WITHOUT WRITTEN PERMISSION.

REVISIONS

REV.	DESCRIPTION	DRFTG.	APP. BY	DATE

KEY

1	3	5	7	9	11	13	15	17	19	21	23	25	27	29	31	33	35	37	39	41	43	45	47	49	51	53	55	57	59	61	63	65	67	69	71	73	75	77	79	81	83	85	87	89	91	93	95	97	99
GND	+5V	GND	INH GND	RINH9	RINH11	INH GND	RINH10	RINH8	RINH6	RINH4	RINH5	RINH7	RINH14		DATOC	STROBE	MEM2	MEM3	MEM1	MEMO	SY2	SY0	SY4	SY6	SX00	SX20	SX60	SX40	SX2	SX4	DATIA	DATIB	DATIC	DATOB	DATOA	DCHP OUT	INTP OUT	DCHP IN	INTP IN	SELB	SELD	IOPLS	DSO	IORST	DS1	DS2	DS3	DS4	DCHA					GND
GND	+5V	GND	INH GND	N.A.	N.A.	N.A.	SX4	SX2	SX0	SY4	INTA	MSKO	N.A.		DATOC	DS3	MEM1	MEM3	MEM1	MEMO	SY2	SY0	SY4	SY6	SX00	SX20	SX60	SX40	SX2	SX4	DATIA	DATIB	DATIC	DATOB	DATOA	DCHP OUT	INTP OUT	DCHP IN	INTP IN	SELB	SELD	IOPLS	DSO	IORST	DS1	DS2	DS3	DS4	DCHA					GND
GND	+5V	GND	INH GND	RINH9	RINH11	INH GND	RINH10	RINH8	RINH6	RINH4	RINH5	RINH7	RINH14		DATOC	STROBE	MEM2